KAJA IPURI
Single-lever sink mixer

flow rate A
output 13 l/min
at 3 bar flow pressure

with swivel spout,
spout-end turnable,
extension 235 mm aerator,
flexible connection hoses and ECO mixing cartridge with SiC-/ceramic-disks
and adjustable temperature limiter

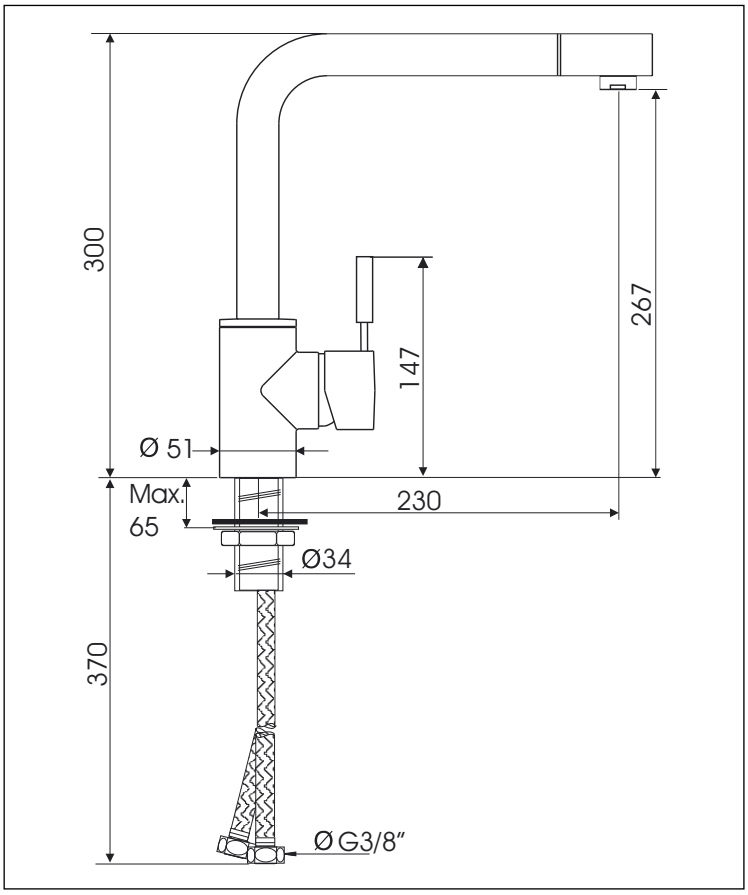

finish	code with stick lever	code with ring lever
chrome	55828-C	52828-C

© kaja-armaturen 11|2013

Model, range and technical changes and errors excepted.

All dimensions in mm.

kaja ARMATUREN

Kaut & Janke GmbH & Co. KG
Am Ballo 14
D-58675 Hemer
www.kaja-armaturen.de

Phone: +49 (0) 2372 9094-0
Fax: +49 (0) 2372 9094-60
info@kaja-armaturen.de