KAJA IPURI
Single-lever sink mixer DN 15

flow rate A
output 13 l/min
at 3 bar flow pressure

with quadratic swivel spout,
extension 230 mm,
aerator M 24x1, flexible connection hoses
and ECO mixing cartridge with SiC-/ceramic-disks
and adjustable temperature limiter

finish	code with stick lever	code with ring lever
chrome	55821-C	52821-C
alu-finish	55821-E	52821-E
stainless steel finish	55821-ESO	52821-ESO

different product options (see following pages)

for unpressurised water heaters

for under-window installation

for unpressurised water heaters
for under-window installation

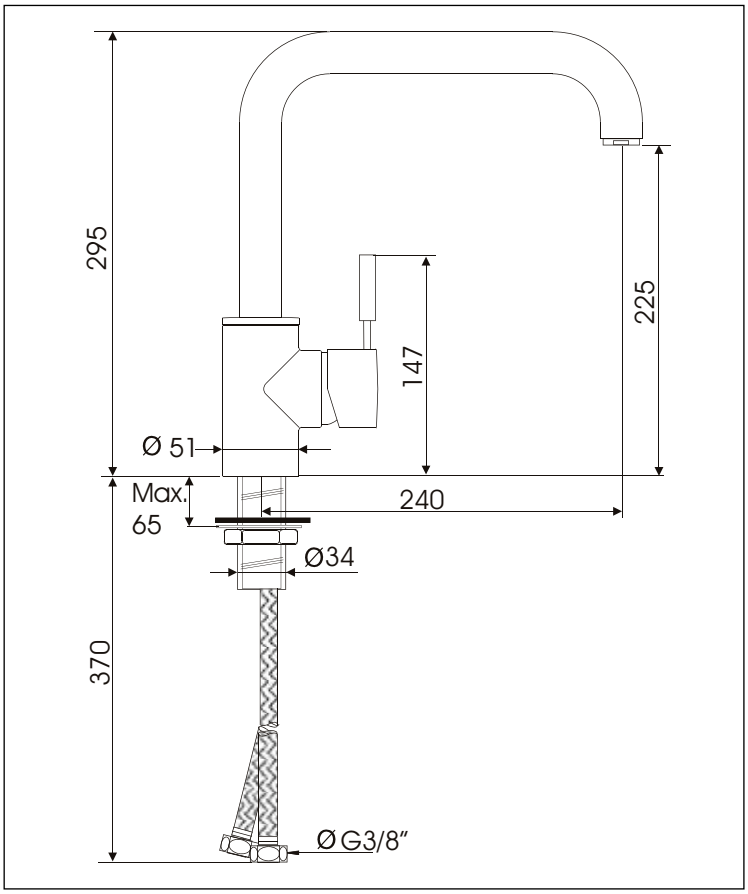

© kaja-armaturen 11|2013

Model, range and technical changes and errors excepted.

All dimensions in mm.

kaja ARMATUREN

Kaut & Janke GmbH & Co. KG
Am Ballo 14
D-58675 Hemer
www.kaja-armaturen.de

Phone: +49 (0) 2372 9094-0
Fax: +49 (0) 2372 9094-60
info@kaja-armaturen.de

KAJA IPURI
Single-lever sink mixer DN 15
for unpressurised water heaters

with quadratic swivel spout,
extension 230 mm,
aerator M 24x1, flexible connection hoses
and ECO mixing cartridge with SiC-/ceramic-disks
and adjustable temperature limiter

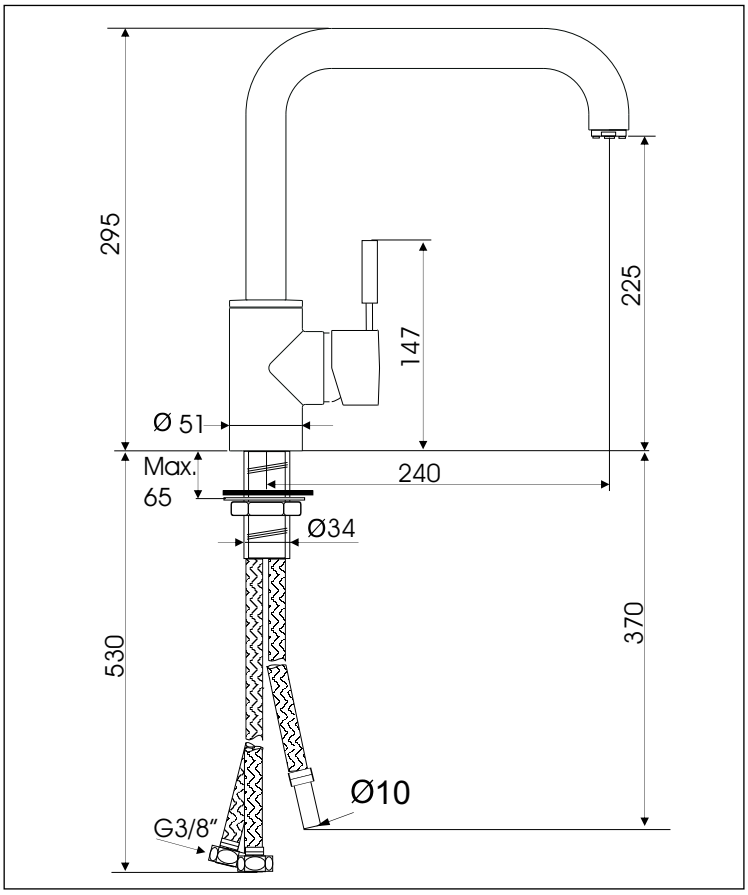

finish	code with stick lever	code with ring lever
chrome	55921-C	52921-C
alu-finish	55921-E	52921-E
stainless steel finish	55921-ESO	52921-ESO

© kaja-armaturen 11|2013

Model, range and technical changes and errors excepted.

All dimensions in mm.

kaja ARMATUREN

Kaut & Janke GmbH & Co. KG
Am Ballo 14
D-58675 Hemer
www.kaja-armaturen.de

Phone: +49 (0) 2372 9094-0
Fax: +49 (0) 2372 9094-60
info@kaja-armaturen.de

KAJA IPURI
Single-lever sink mixer DN 15
for under-window installation

flow rate A
output 13 l/min
at 3 bar flow pressure

with quadratic swivel spout,
extension 230 mm,
aerator M 24x1, flexible connection hoses
and ECO mixing cartridge with SiC-/ceramic-disks
and adjustable temperature limiter

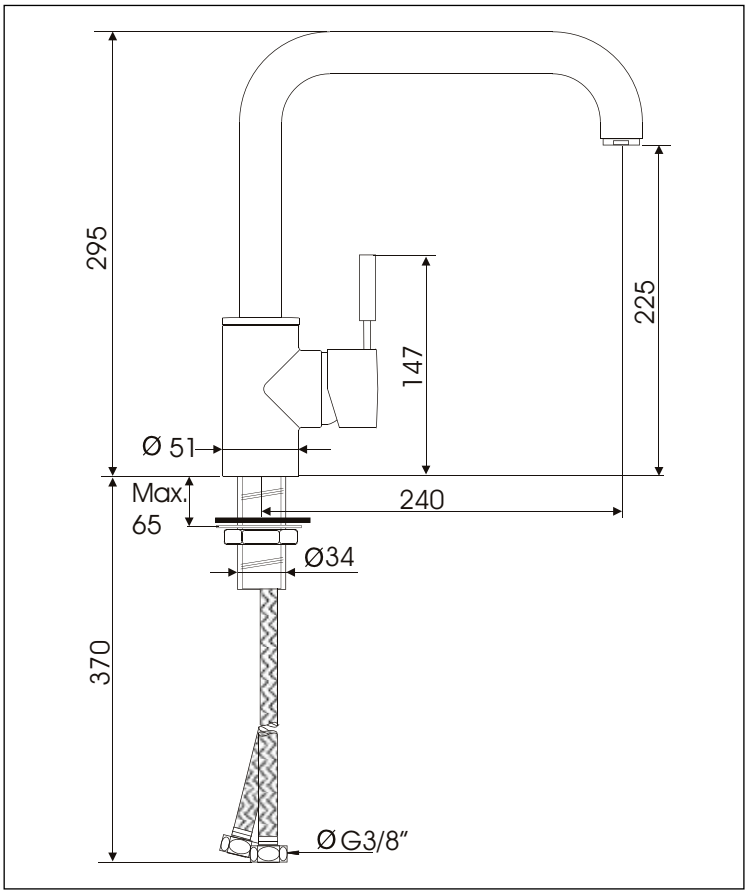

finish	code with stick lever	code with ring lever
chrome	55823-C	52823-C
alu-finish	55823-E	52823-E
stainless steel finish	55823-ESO	52823-ESO

© kaja-armaturen 11|2013

Model, range and technical changes and errors excepted.

All dimensions in mm.

kaja ARMATUREN

Kaut & Janke GmbH & Co. KG
Am Ballo 14
D-58675 Hemer
www.kaja-armaturen.de

Phone: +49 (0) 2372 9094-0
Fax: +49 (0) 2372 9094-60
info@kaja-armaturen.de

KAJA IPURI
Single-lever sink mixer DN 15
for unpressurised water heaters
for under-window installation

with quadratic swivel spout,
extension 230 mm,
aerator M 24x1, flexible connection hoses
and ECO mixing cartridge with SiC-/ceramic-disks
and adjustable temperature limiter

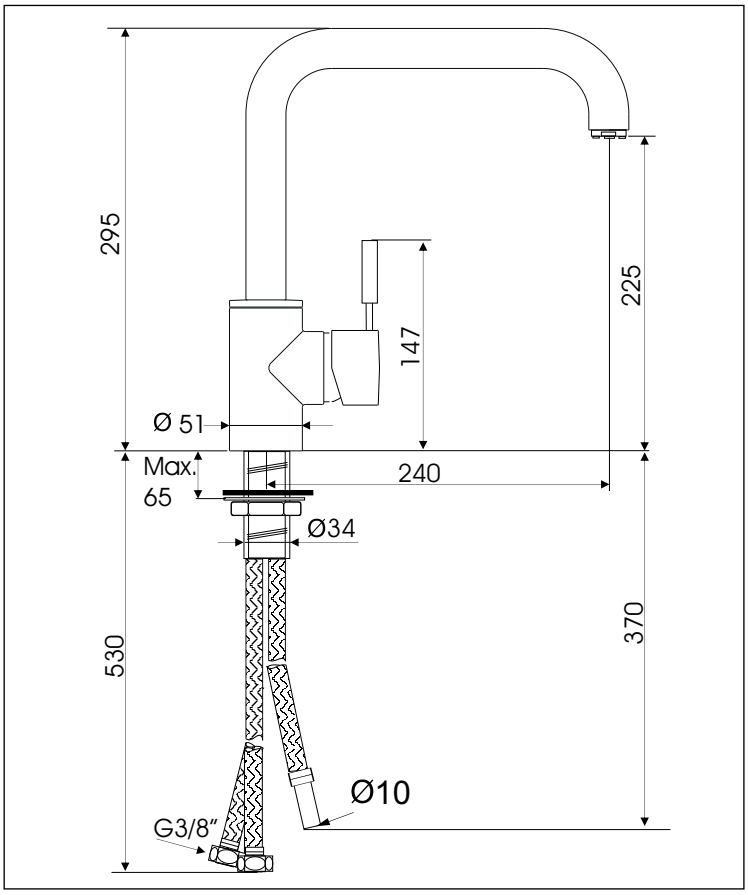

finish	code with stick lever	code with ring lever
chrome	55923-C	52923-C
alu-finish	55923-E	52923-E
stainless steel finish	55923-ESO	52923-ESO

© kaja-armaturen 11|2013

Model, range and technical changes and errors excepted.

All dimensions in mm.

kaja ARMATUREN

Kaut & Janke GmbH & Co. KG
Am Ballo 14
D-58675 Hemer
www.kaja-armaturen.de

Phone: +49 (0) 2372 9094-0
Fax: +49 (0) 2372 9094-60
info@kaja-armaturen.de