BQUADRAT

KAJA B-QUADRAT
Pillar tap DN 15

flow rate A
output 13 l/min
at 3 bar flow pressure

extension 90 mm
with aerator M 24x1,
handle with ceramic gasket,
and flexible connection hose

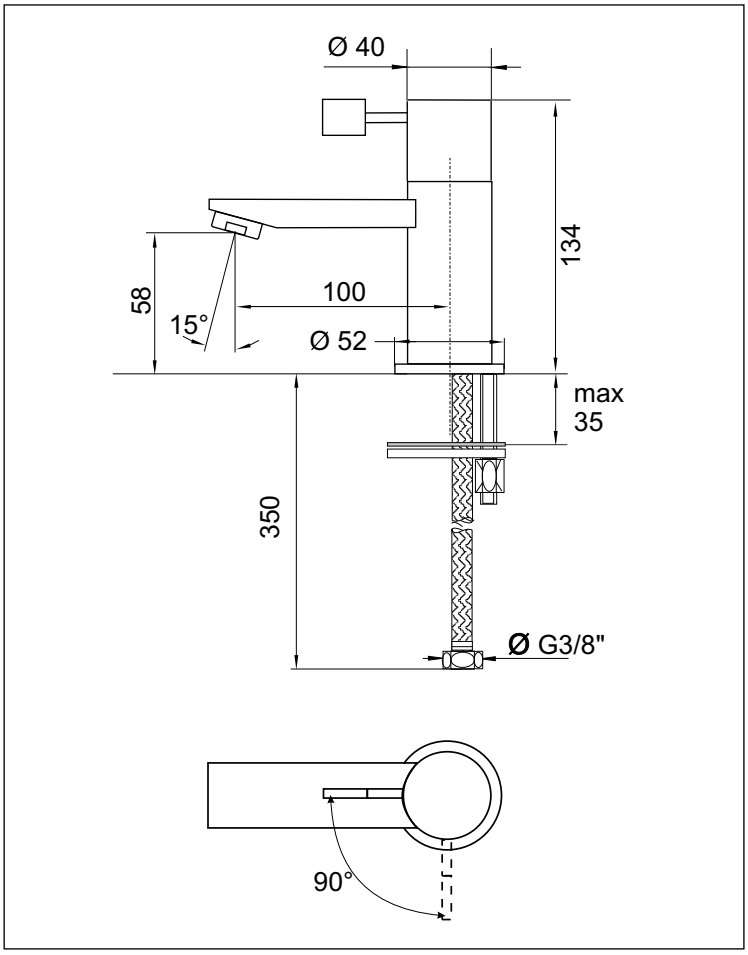

finish	code
chrome	20685-C

© kaja-armaturen 11|2013

Model, range and technical changes and errors excepted.

All dimensions in mm.

kaja ARMATUREN

Kaut & Janke GmbH & Co. KG
Am Ballo 14
D-58675 Hemer
www.kaja-armaturen.de

Phone: +49 (0) 2372 9094-0
Fax: +49 (0) 2372 9094-60
info@kaja-armaturen.de