MIX|DISK

KAJA MIX
Single-lever sink mixer for under-window installation with pull-out spray head DN 15

P -IX 7733/IAo,
flow rate A
output 12 l/min
at 3 bar flow pressure

swivel shower arm with extractable dishshower,
back-flow preventer,
automatic conversion shower/jet aerator M24x1,
mixing cartridge with SiC-/ceramic-discs
and adjustable temperature limiter

finish	code with loop lever	code with solid lever
chrome	36832-C	33832-C
alu-finish	36832-E	33832-E
stainless steel finish	36832-ESO	33832-ESO
white	36832-W	33832-W
mocca	36832-M	33832-M

further colours on repuest

different product options (see following pages)

for unpressurised water heaters

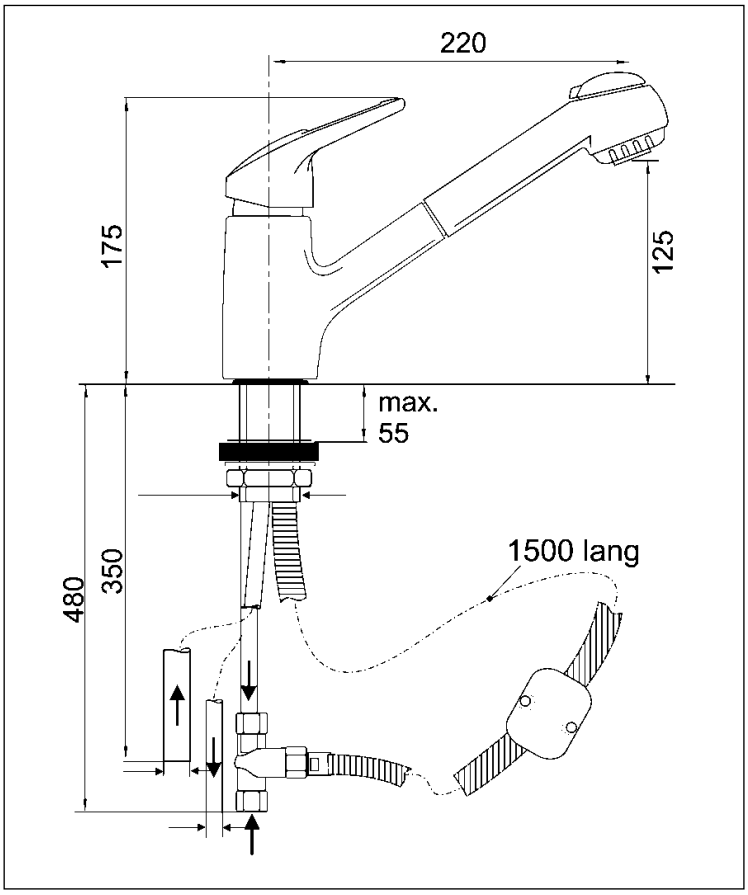

© kaja-armaturen 11|2013

Model, range and technical changes and errors excepted.

All dimensions in mm.

kaja ARMATUREN

Kaut & Janke GmbH & Co. KG
Am Ballo 14
D-58675 Hemer
www.kaja-armaturen.de

Phone: +49 (0) 2372 9094-0
Fax: +49 (0) 2372 9094-60
info@kaja-armaturen.de

MIX|DISK

KAJA MIX
Single-lever sink mixer for under-window installation with pull-out spray head DN 15
for unpressurised water heaters

swivel shower arm with extractable dishshower,
back-flow preventer,
automatic conversion shower/jet aerator M24x1,
mixing cartridge with SiC-/ceramic-discs
and adjustable temperature limiter

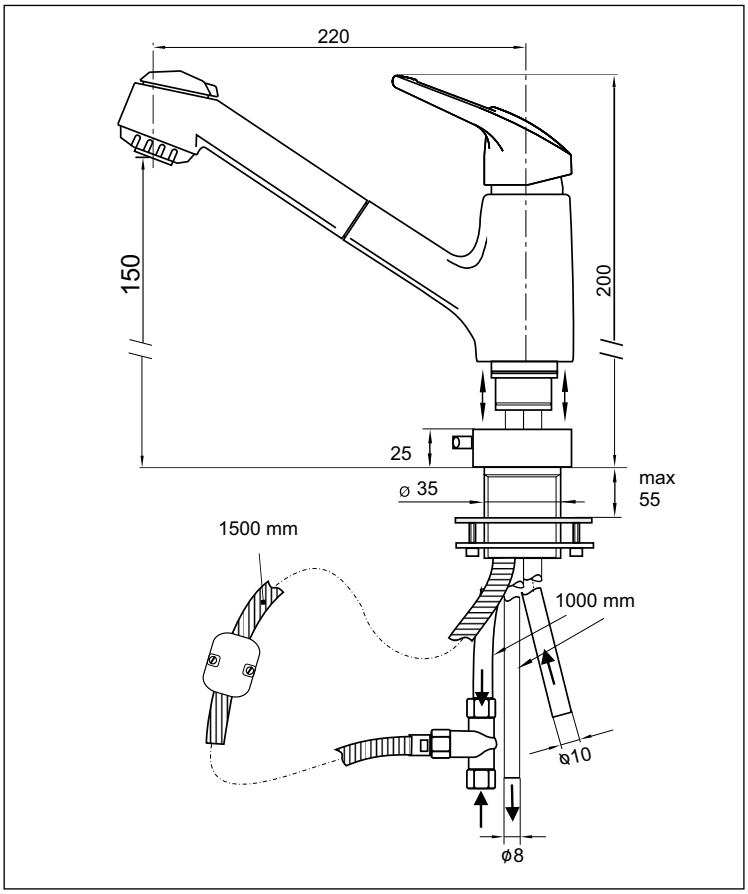

finish	code with loop lever	code with solid lever
chrome	36932-C	33932-C
alu-finish	36932-E	33932-E
stainless steel finish	36932-ESO	33932-ESO
white	36932-W	33932-W
mocca	36932-M	33932-M

further colours on repuest

© kaja-armaturen 11|2013

Model, range and technical changes and errors excepted.

All dimensions in mm.

kaja ARMATUREN

Kaut & Janke GmbH & Co. KG
Am Ballo 14
D-58675 Hemer
www.kaja-armaturen.de

Phone: +49 (0) 2372 9094-0
Fax: +49 (0) 2372 9094-60
info@kaja-armaturen.de